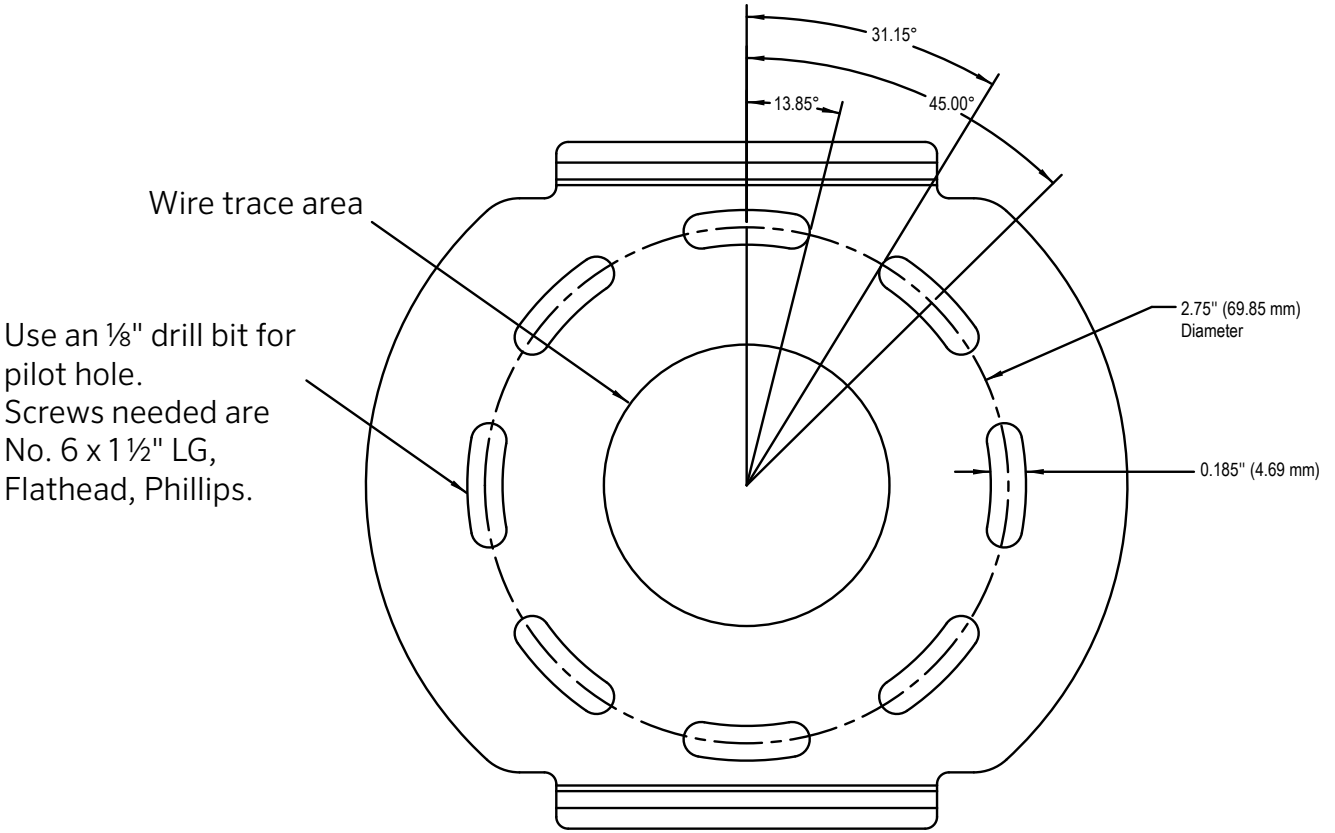

Hunter®

Hunter Industries
Engineering
1940 Diamond Street.
Sam Marcos, CA 92078

TITLE:
Mounting Plate, SD

SCALE: 1:1

SHEET 1 OF 1